Installation instructions

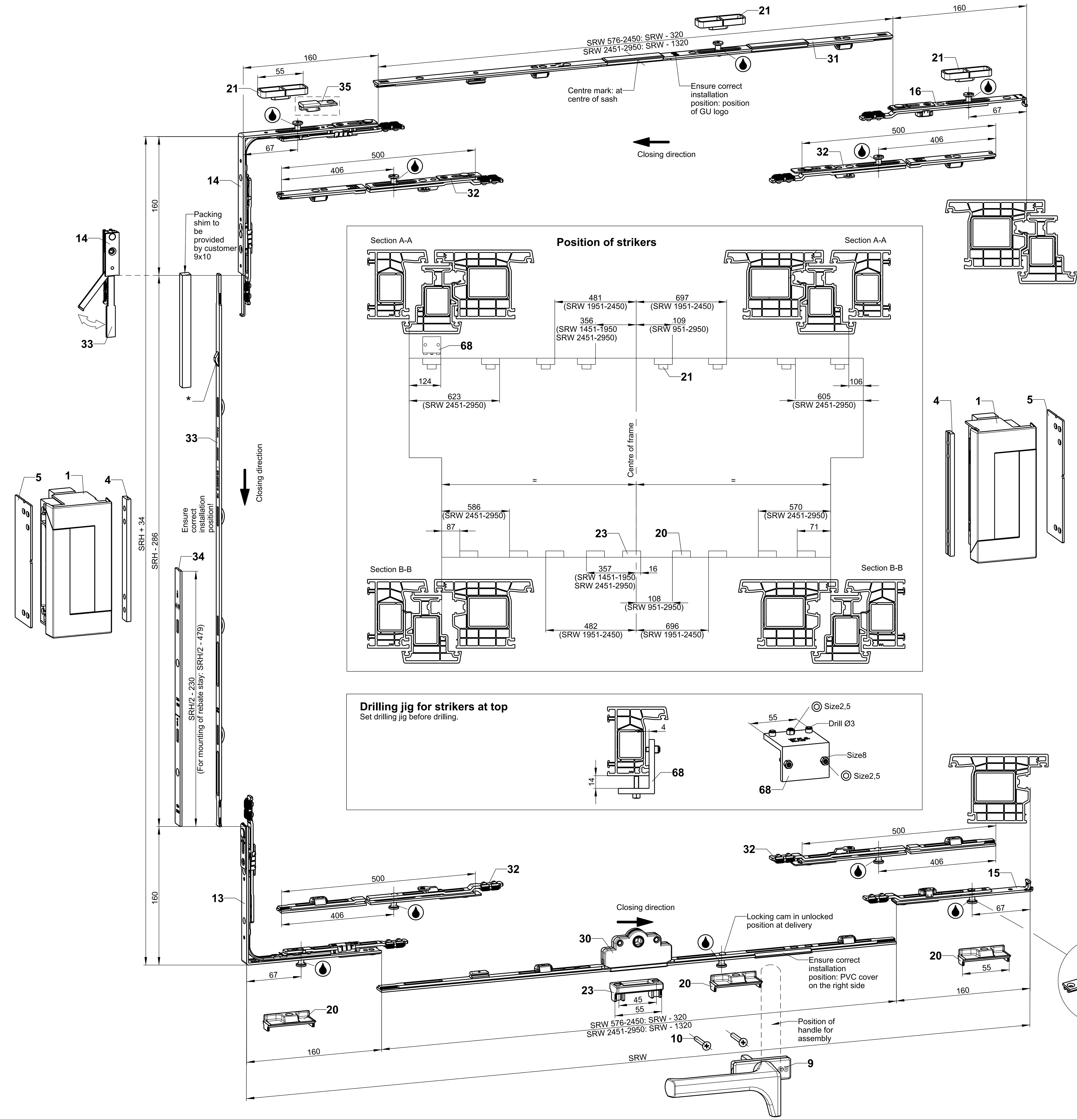

Circumferential locking system

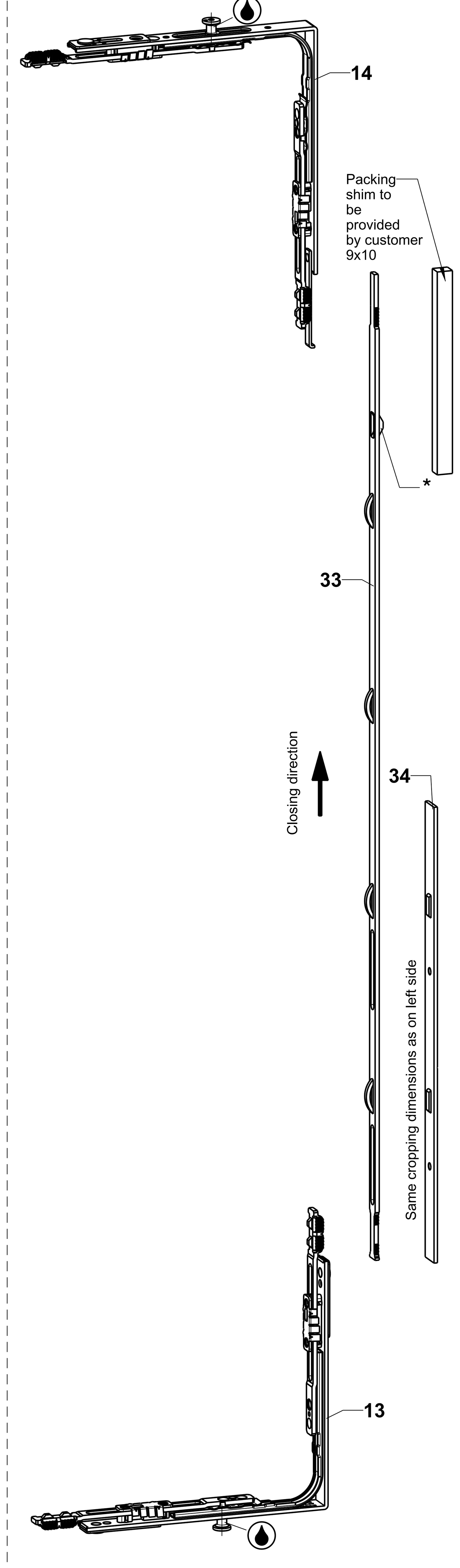

<table>
<tr><th>Item</th><th colspan="5">Description</th><th>Order no.</th><th>Qty: Standard locking system</th><th>Qty: Circumferential locking system [1]</th><th>Contents of basic hardware set K-19033-00-0</th></tr>
<tr><td>1</td><td colspan="5">Pair of horizontal pivot UNITAS 16 Profine 76</td><td>6-37887-00-P</td><td colspan="2">1</td><td>1</td></tr>
<tr><td>4</td><td colspan="5">Sash part packer</td><td>9-49331-00-0</td><td colspan="2">2</td><td>2</td></tr>
<tr><td>5</td><td colspan="5">Frame part packer</td><td>9-49330-00-0</td><td colspan="2">2</td><td>2</td></tr>
<tr><td>9</td><td colspan="5">DIRIGENT-T46 N10 turn handle</td><td>6-31467-50-0</td><td colspan="2">1</td><td>1</td></tr>
<tr><td>10</td><td colspan="5">Countersunk-head tapping screw ST 4,8 x 38 ISO 7050</td><td>9-13089-38-R</td><td colspan="2">2</td><td>2</td></tr>
<tr><td>13</td><td colspan="3">Corner-drive, bottom</td><td>LC–MA</td><td>1</td><td>6-32021-00-0</td><td>1</td><td>2</td><td>1</td></tr>
<tr><td>14</td><td colspan="3">Corner-drive, top</td><td>LC–MA</td><td>1</td><td>6-35273-01-0</td><td>1</td><td>2</td><td>1</td></tr>
<tr><td>15</td><td colspan="3">Gear connector 90°, bottom</td><td>LC–MA</td><td>1</td><td>6-32104-00-0</td><td>1</td><td>-</td><td>1</td></tr>
<tr><td>16</td><td colspan="3">Gear connector 180°, top</td><td>LC–MA</td><td>1</td><td>6-34451-00-0</td><td>1</td><td>-</td><td>1</td></tr>
<tr><td rowspan="6">20</td><td colspan="5">Striker, bottom</td><td rowspan="6">E-13534-00-0</td><td colspan="2" rowspan="2">2</td><td rowspan="6">4</td></tr>
<tr><td>SRW</td><td colspan="4">576-950</td></tr>
<tr><td>SRW</td><td colspan="4">951-1450</td><td colspan="2">3</td></tr>
<tr><td>SRW</td><td colspan="4">1451-1950</td><td colspan="2">4</td></tr>
<tr><td>SRW</td><td colspan="4">1951-2450</td><td colspan="2">5</td></tr>
<tr><td>SRW</td><td colspan="4">2451-2950</td><td colspan="2">6</td></tr>
<tr><td rowspan="6">21</td><td colspan="5">Striker, top</td><td rowspan="6">9-51498-01-0</td><td colspan="2" rowspan="2">2</td><td rowspan="6">4</td></tr>
<tr><td>SRW</td><td colspan="4">576-950</td></tr>
<tr><td>SRW</td><td colspan="4">951-1450</td><td colspan="2">3</td></tr>
<tr><td>SRW</td><td colspan="4">1451-1950</td><td colspan="2">4</td></tr>
<tr><td>SRW</td><td colspan="4">1951-2450</td><td colspan="2">5</td></tr>
<tr><td>SRW</td><td colspan="4">2451-2950</td><td colspan="2">6</td></tr>
<tr><td>23</td><td colspan="5">Night vent striker</td><td>9-45473-00-0</td><td colspan="2">1</td><td>1</td></tr>
<tr><td rowspan="6">30</td><td colspan="6">VHH gear, 30BS</td><td colspan="2" rowspan="6">1</td><td rowspan="6">-</td></tr>
<tr><td>SRW 576-950</td><td>Length</td><td>630</td><td>LC–MA</td><td>-</td><td>G-22343-30-0</td></tr>
<tr><td>SRW 951-1450</td><td>Length</td><td>1130</td><td>LC–MA</td><td>1</td><td>G-22344-30-0</td></tr>
<tr><td>SRW 1451-1950</td><td>Length</td><td>1630</td><td>LC–MA</td><td>2</td><td>G-22345-30-0</td></tr>
<tr><td>SRW 1951-2450</td><td>Length</td><td>2130</td><td>LC–MA</td><td>3</td><td>G-22346-30-0</td></tr>
<tr><td>SRW 2451-2950</td><td>Length</td><td>1630</td><td>LC–MA</td><td>2</td><td>G-22345-30-0</td></tr>
<tr><td rowspan="6">31</td><td colspan="6">Extension</td><td colspan="2" rowspan="6">1</td><td rowspan="6">-</td></tr>
<tr><td>SRW 576-950</td><td>Length</td><td>630</td><td>LC–MA</td><td>-</td><td>6-34106-01-0</td></tr>
<tr><td>SRW 951-1450</td><td>Length</td><td>1130</td><td>LC–MA</td><td>1</td><td>6-34106-02-0</td></tr>
<tr><td>SRW 1451-1950</td><td>Length</td><td>1630</td><td>LC–MA</td><td>2</td><td>6-34106-03-0</td></tr>
<tr><td>SRW 1951-2450</td><td>Length</td><td>2130</td><td>LC–MA</td><td>3</td><td>6-34106-04-0</td></tr>
<tr><td>SRW 2451-2950</td><td>Length</td><td>1630</td><td>LC–MA</td><td>2</td><td>6-34106-03-0</td></tr>
<tr><td rowspan="2">32</td><td colspan="6">Extension 500</td><td colspan="2" rowspan="2">4</td><td rowspan="2">-</td></tr>
<tr><td>SRW 2451-2950</td><td>Length</td><td>500</td><td>LC–MA</td><td>1</td><td>6-32142-00-0</td></tr>
<tr><td rowspan="5">33</td><td colspan="6">Vertical rod</td><td rowspan="5">1</td><td rowspan="5">2</td><td rowspan="5">-</td></tr>
<tr><td>SRH 666-916</td><td>Length</td><td colspan="3">630</td><td>9-32821-01-0</td></tr>
<tr><td>SRH 917-1166</td><td>Length</td><td colspan="3">880</td><td>9-32821-02-0</td></tr>
<tr><td>SRH 1167-1666</td><td>Length</td><td colspan="3">1380</td><td>9-32821-03-0</td></tr>
<tr><td>SRH 1667-2166</td><td>Length</td><td colspan="3">1880</td><td>9-32821-04-0</td></tr>
<tr><td rowspan="4">34</td><td colspan="6">Cover rail</td><td rowspan="4">1</td><td rowspan="4">2</td><td rowspan="4">-</td></tr>
<tr><td>SRH 666-1166</td><td>Length</td><td colspan="3">392</td><td>9-32819-02-0</td></tr>
<tr><td>SRH 1167-1666</td><td>Length</td><td colspan="3">642</td><td>9-32819-03-0</td></tr>
<tr><td>SRH 1667-2166</td><td>Length</td><td colspan="3">892</td><td>9-32819-04-0</td></tr>
<tr><td>35</td><td colspan="5">Travel-restrictor for circumferential locking system</td><td>9-33432-00-0</td><td>-</td><td>1</td><td>-</td></tr>
</table>

Accessories

Item	Description	Order no.	Qty: Standard locking system	Qty: Circumferential locking system	Contents
43	DIRIGENT-F/Z N10 turn handle, lockable	K-16810-00-0	alternatively to item 9		-
44	Square spindle 7 x 118	9-26874-56-0			
55	DIRIGENT-S 44 handle N00	6-29189-30-0	alternatively to item 9		-
60	Rebate stay 27 A (See sheet 2)	5-21306-00-L/R	1 LH / 1 RH		-
	Lockable rebate stay 27 A (See sheet 2)	5-21689-00-L/R			
61	Key for lockable rebate stay (not shown)	9-23074-00-0	1		-
66	Rod guide	0-1198A-00-0	4 - 8	-	-
68	Drilling jig U16 Striker, top	6-40117-00-0	1		-

[1] From SRW 1951 we recommend to use a circumferential locking system.

Accessories

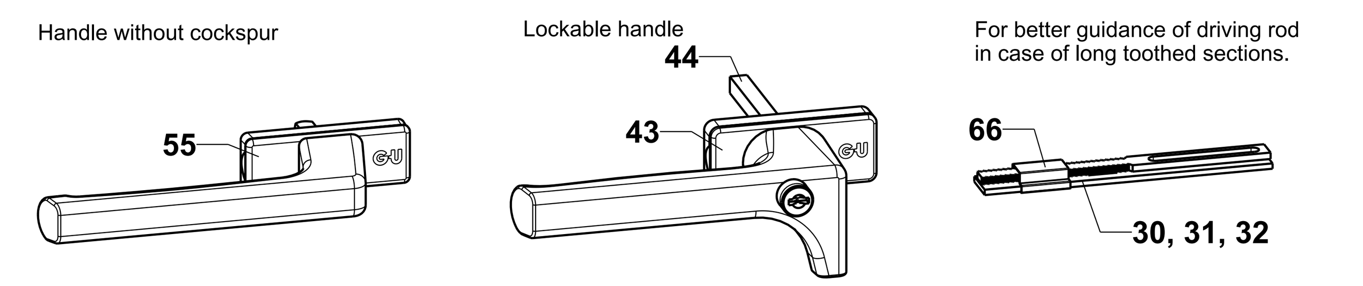

Observe the following:

-The product guidelines of the profile manufacturer regarding construction, assembly, max. sash dimensions, max. sash weights and material qualities (e.g. linear profile expansion) are to be observed.
-The appropriate product information must be observed (see GU order catalogue).

Ordering specification:

-Sash rebate width SRW
-Sash rebate height SRH
-Colour of horizontal pivots and turn handle
-Standard or circumferential locking system
-Accessories

Hardware fixing:

-In reinforcement profile: countersunk-head tapping screw (eg ISO 7050)
-In PVC profile: self-tapping window screw suitable for PVC

-Horizontal pivot: 4,8 x 38
-Rebate stay: 4,2 x 25
-Sash locking system: Countersunk screws 4,2 x 25
-Frame locking system: Countersunk screws 4,2 x 35

-The specified fixing screws are a recommendation based on our experience.
The responsibility for durable and secure hardware fixing lies with the fabricator!

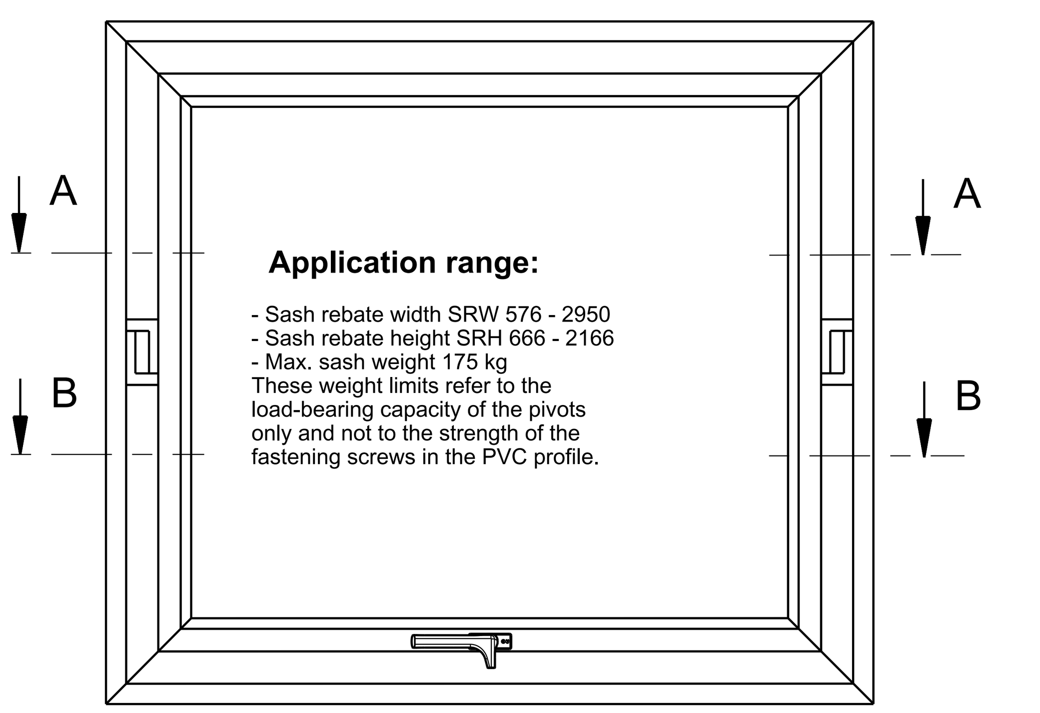

Installation instructions

Mounting the frame and the sash:
In order to prevent the PVC profiles from warping upon fixing the horizontal pivots, the vertical reinforcement profiles have to be screwed from the hardware side.

Profile machining:
-Sash profile:
Mill recess for gear case and drill holes for handle. Mind different drill diameters.

-reverse profile:
Drill Ø20 hole and 2 x Ø12 holes for top corner-drive (item 14).
Crop web of reverse profile on vertical side of corner-drive by at least 200 mm.
Crop web with circumferential locking system in both corners.

-Frame profile:
Drill Ø3 holes for strikers at top using drilling jig (item 68).

Cropping the locking components:
-Crop gear item 30 and extension item 31 equally on both sides according to indicated formula.
-Crop vertical rod (item 33) and cover rail (item 34) according to indicated formula.

When cropping more than 250 mm (vertical rod) or 125 mm (cover rail), start at marking notch.

Installation sequence of locking system components:
-Bottom corner-drive (item 13) and 90° gear-connector (item 15), respectively second bottom corner-drive (item 13) instead of bottom 90° gear-connector (item 15) for circumferential locking system.
-Gear item 30: with SRW exceeding 2451 mm, insert extensions 500 item 32 between gear and gear connector, respectively corner-drive.
-Fasten packer 9 x 10 (to be provided by customer) in the area of the corner-drive connecting piece at the top (item 14) with a vertical rod (item 33) and, if available, in the area of embossing * of the vertical rod on the reversible profile (short pieces or long part).
Perform these steps on both sides with circumferential locking system.

-After assembly of reverse-profile frame engage vertical rod (item 33) in top corner-drive (item 14), secure with bracket, and insert into drill hole Ø20 from above.

Then engage vertical rod in bottom corner-drive (item 13) (mind centre position of locking cam).
Perform these steps on both sides with circumferential locking system.
-Cover rail (item 34) (with circumferential locking system on both sides)..
-Top gear connector 180° (item 16) (not required with circumferential locking system).
-Extension item 31: with SRW exceeding 2451 mm, insert extension 500 item 32 between extension item 31 and gear connector, respectively corner-drive.
-Turn handle (item 9) in open position..
Then turn into closed position to shear off the arresting pins on the locking system components.
-With circumferential locking system: insert travel-restrictor (item 35) in upper left corner-drive (with central locking system in closed position).

Installing the horizontal pivots:
For screw-fixing of the pivot in the reinforcement profile only:
Drill fastening holes Ø4.
Separate sash and frame parts by releasing the brake nipple screw.
Insert sash part packer (item 4) between sash profile and sash part and insert frame part packer (item 5) between frame profile and frame part.
Screw sash and frame parts tightly to sash and frame.

Installation on frame:
Mount strikers at top (item 21/) and bottom (item 20), and night vent striker (item 23) shown in drawing.

Lubricate all locking and sliding points with lubricants free of resin and acid.
The horizontal pivots should not be greased or oiled.

The documents accompanying the product were issued when the product was manufactured. Due to the fact that our products undergo continuous development, you should verify at www.g-u.com, if the technical documents you have at hand are up to date. Be sure to use the latest edition of our technical documents.

Proprietary rights apply in accordance with ISO 16016.

GU GRETSCH-UNITAS

Sprache: EN | V8

Description:
UNITAS 16 horizontal-pivot hardware
Company Profine, System 76
--

Date	Change No.	Sig	Ver.	Replacement for	Revision:	Iteration:	Level:	Scale	Drawing No.	Size	Sheet
17.04.2019	G35932	Ja	Ha	--	1	3	Released	%	0-46849-AD-0-EN	A1	1/2

Installation instructions

Section C-C

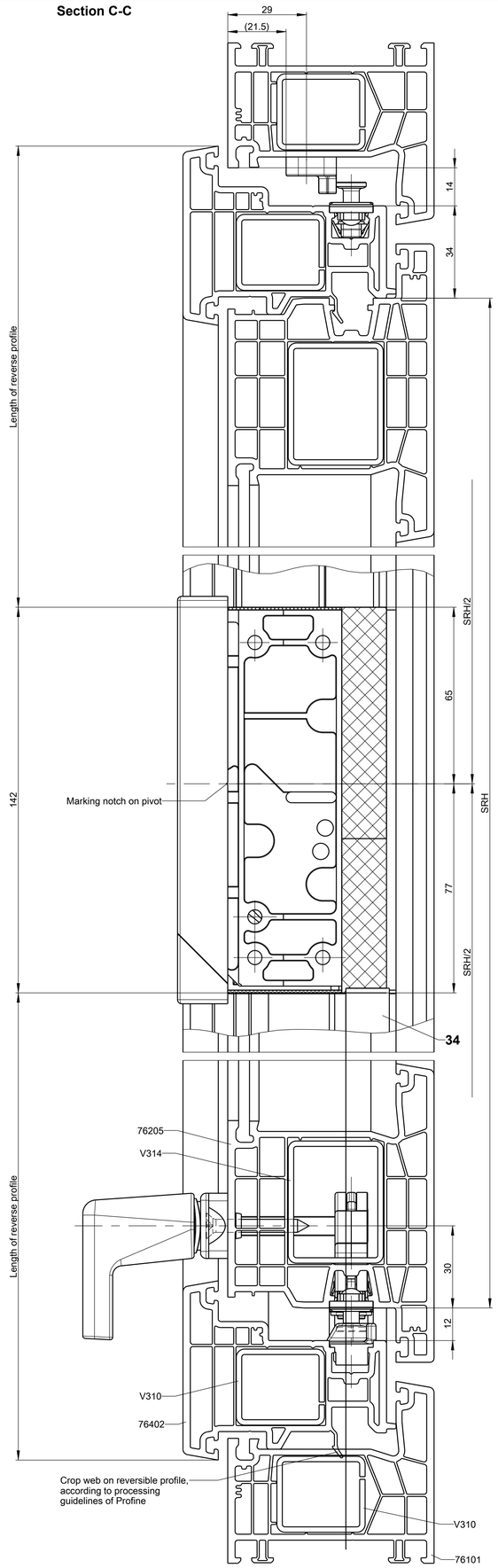

Section D-D

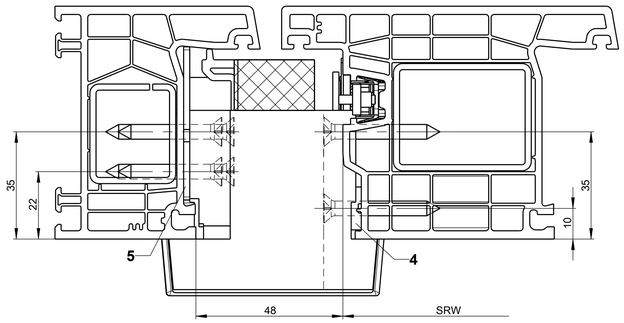

Mounting position of rebate stay
Section C-C

1:2

Opening angle	Stay arm length	Dimension A	Dimension B	min. SRH
17°	150	295	340	1200

For other opening angles, the installation position (dimensions A and B) must be changed accordingly.

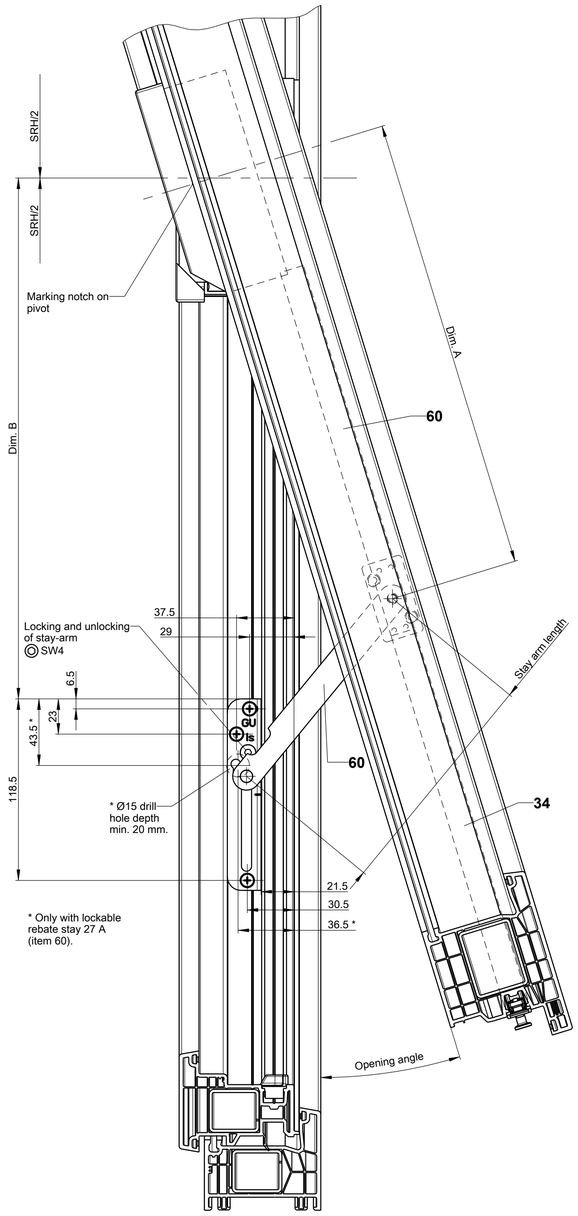

* Only with lockable rebate stay 27 A (item 60).

Mounting position of rebate stay
Section E-E

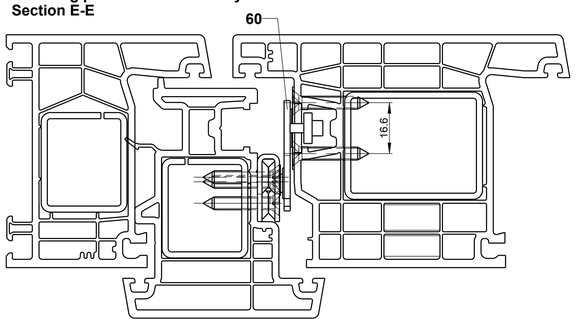

Mounting the horizontal pivots

Drawing shows left pivot

After having separated the sash and frame components of the pivots, swivel the rocker arm back in its closed position so the screw holes become accessible again. For this, the hook on the rocker arm must be unlocked.

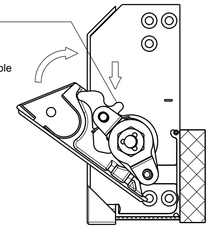

Mounting hole dimensions

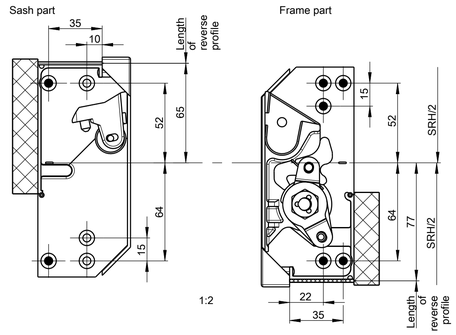

Pre-drill Ø 4.0 for countersunk screw.

No pre-drilling for self-tapping window screw.

Hinging and unhinging the sash
Adjusting the sash brake

Drawing shows left pivot

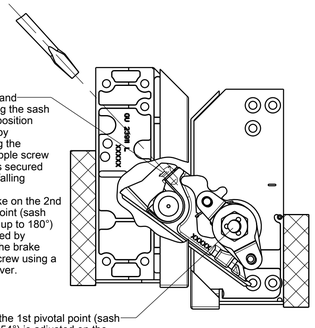

Machining of reversible profile

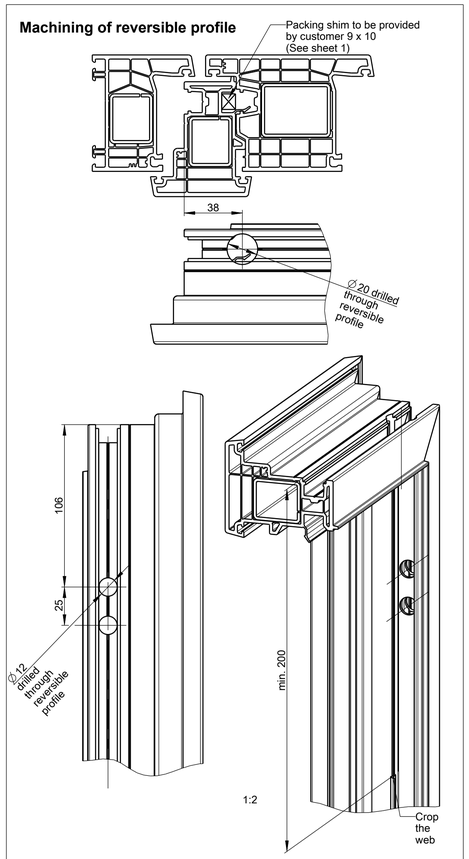

Preparing the sash

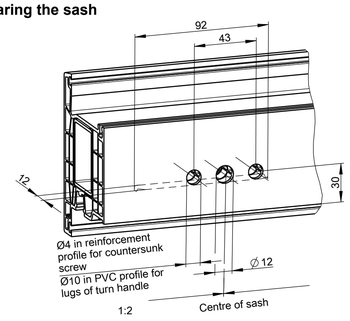

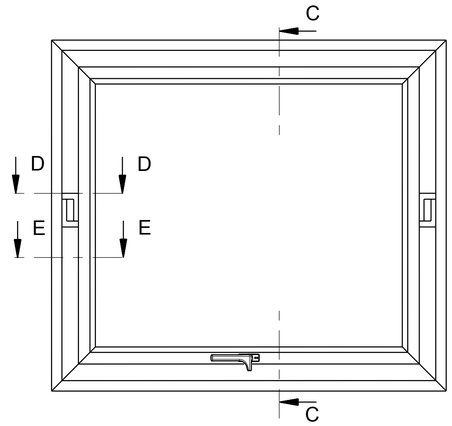

The documents accompanying the product were issued when the product was manufactured. The data they contain is based on the specifications valid at that time. If delivery takes place later, you should verify at www.gu.com, if the technical documents you have at hand are up to date. We are to sell the latest edition of our technical documents.

Proprietary rights apply in accordance with ISO 16016.

Description:
UNITAS 16 horizontal-pivot hardware
Company Profine, System 76
--

Date	Change No.	Sig	Ver.	Replacement for	Revision	Iteration	Level	Scale	Drawing No.	Size	Sheet
17.04.2019	G35932	Ja	Ha	--	1	3	Released	1:1	0-46849-AD-0-EN	A1	2/2

Sprache: EN
V8